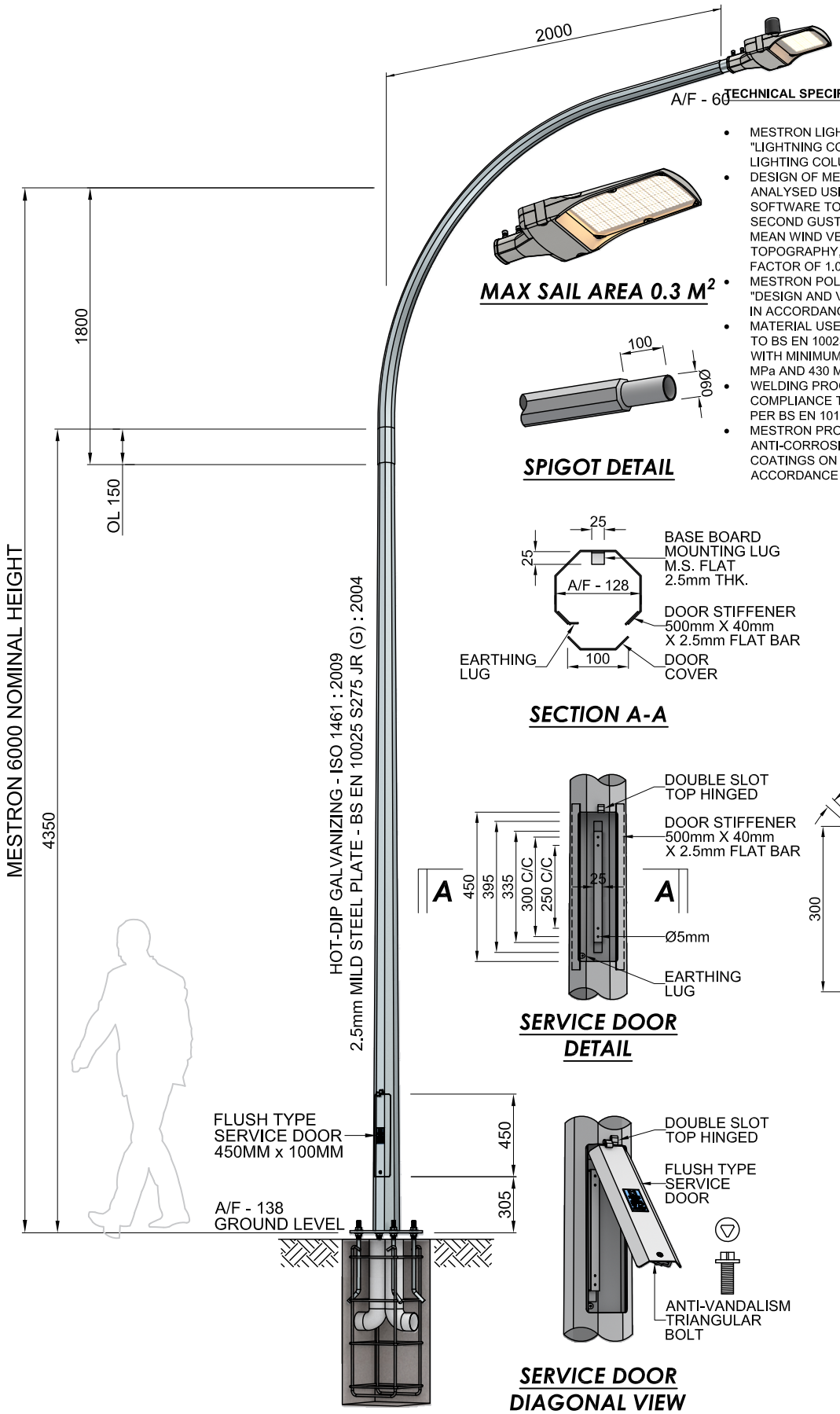

MAX SAIL AREA 0.3 M²

SPIGOT DETAIL

TECHNICAL SPECIFICATION

- MESTRON LIGHTING POLE COMPLY TO BS EN 40-5 : 2002 "LIGHTNING COLUMNS, REQUIREMENT FOR STEEL LIGHTING COLUMNS"
- DESIGN OF MESTRON POLE ARE COMPREHENSIVELY ANALYSED USING STAAD. PRO V8i STRUCTURAL DESIGN SOFTWARE TO WITHSTAND 35 M/S WIND-SPEED AT 3 SECOND GUST EQUIVALENT TO 20.6 M/S OF 10 MINUTES MEAN WIND VELOCITY AT 10M HEIGHT WITH TOPOGRAPHY, TERRAIN ROUGHNESS AND STATISTICAL FACTOR OF 1.0
- MESTRON POLE DESIGN VALIDATED BY TYPE TEST "DESIGN AND VARIFICATION, VERIFICATION BY TESTING" IN ACCORDANCE TO BS EN 40-3-2 : 2013
- MATERIAL USED FOR MESTRON LIGHTING POLE COMPLY TO BS EN 10025 S275 JR : 2004 / JIS G3101 : 2010 SS400 WITH MINIMUM YIELD AND TENSILE STRENGTH OF 275 MPa AND 430 MPa RESPECTIVELY
- WELDING PROCESS OF MESTRON LIGHTING POLE IN COMPLIANCE TO WELDING PROCESS SPECIFICATION AS PER BS EN 1011-2 : 2001
- MESTRON PRODUCTS ARE PROTECTED WITH ANTI-CORROSIVE TREATMENT WITH HOT-DIP GALVANIZED COATINGS ON FABRICATED IRON AND STEEL ARTICLES IN ACCORDANCE TO ISO 1461 : 2009

SECTION A-A

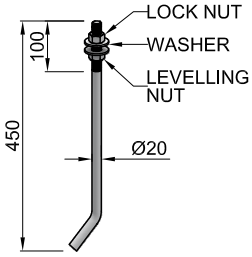

J-BOLT
GRADE 4.8

SERVICE DOOR DETAIL

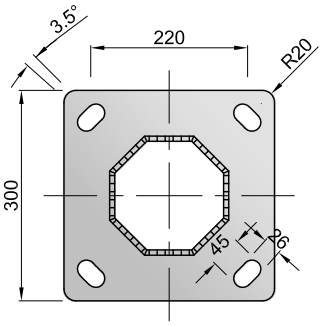

FLANGE PLATE
12mm THK

SERVICE DOOR DIAGONAL VIEW

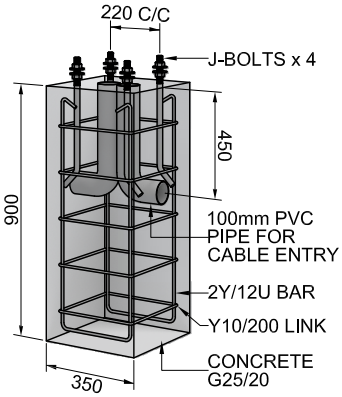

FOOTING DETAIL

WEIGHT (KGS) : 52 KGS

MESTRON ENGINEERING
SDN BHD (591970-X)

TEL : +603 . 8069 1815
FAX : +603 . 8069 1805
EMAIL : info@mestron.com.my
WEB : www.mestron.com.my

6M OCTAGONAL LIGHTING POLE FLANGE MOUNTED TYPE
2.0M SINGLE ARM

DRAWN BY	: ALIF	THIS DRAWING IS THE PROPERTY OF MESTRON ENGINEERING SDN. BHD. AND MUST NOT BE REPRODUCED OR MISUSED WITHOUT THEIR PRIOR CONSENT IN WRITING.
CHECKED BY	: NEO	
DRAWING NO.	: 6M-FM-2.0-SA	ISSUE OF DATE : 01-12-2025